UNLIMITED WARRANTY INFORMATION

If your game cartridge should become defective at any point in time, contact Team Pixelboy by sending an e-mail to pixelboy@teampixelboy.com. The proper course of action (for the repair or replacement of your game cartridge) will be determined in all deliberate speed. Please keep in mind that you may (and probably will) be required to pay shipping fees. Replacements for boxes and manuals may or may not be available. Contact Team Pixelboy for information.

Space Shuttle - A Journey Into Space
Original MSX game © 1983, 1986 Activision
Published on ColecoVision by Team Pixelboy
http://teampixelboy.com
ALL RIGHTS RESERVED

MANUAL REVISION 1.0 PRINTED IN CANADA

ColecoVision™

SPACE SHUTTLE
A JOURNEY INTO SPACE™

Published by Team Pixelboy

INSTRUCTION MANUAL

Thank you for selecting the Space Shuttle - A Journey Into Space game cartridge for your ColecoVision game system or ADAM computer. Please store the included instruction booklets for future reference, and be sure to read them thoroughly to ensure maximum enjoyment of your new game.

MISSION PROFILE

It is the 101st Shuttle mission of the Space Transportation System. You are at the helm of the Space Shuttle Discovery. Approximately 210 nautical miles above the Earth is your target: An orbiting satellite with intentionally programmed gyroscope problems.

Your mission is to launch, establish a stable orbit, launch a top secret satellite, rendezvous and dock with the defective satellite as many times as you can using the minimum of fuel, then return safely to Earth. A word of caution: Each time you successfully dock, the satellite has been programmed to become even more erratic.

Refer to the sub-manual associated with each stage of the mission to develop and improve your Shuttle piloting skills:

- Launch
- Stable Orbit and Satellite Docking
- Deorbit Burn and Reentry
- Landing

You will be evaluated at the end of your flight.

TEAM PARTICIPANTS

- Steve Kitchen: Original game designer
- Rob, Johnboy and Dave (Mr. Micro Ltd.): Programmers of MSX version
- Mystery Man: ColecoVision port
- Luc Miron: Box design, game manual, cart label, software beta-testing
- Dale Crum / Doc4: Box and manual layout (http://doc4design.com)
- Oliver Puschatzki: Box printing services
- Harvey deKleine: Electronic sourcing and assemblies

SPECIAL THANKS : Tom Martin, Tobie St-Aubin, Albert Yarusso, and all AtariAge forum members.

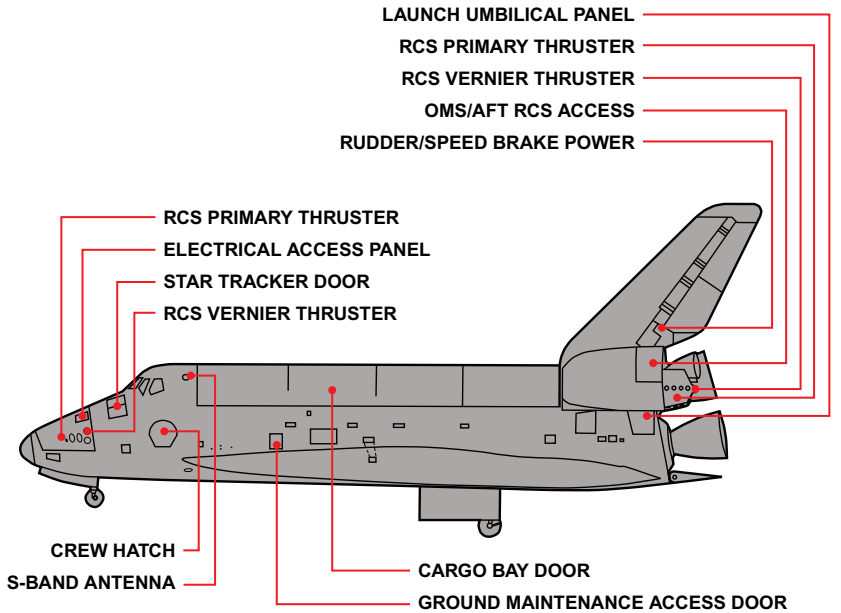

FLIGHT NOTES FROM STEVE KITCHEN

"Ever since I can remember, the Space Program has meant something very special to me. Every time a mission took off, so did my imagination.

"That's why designing a home video version patterned after the real Space Shuttle seemed so appealing - yet challenging. It was quite a task to achieve maximum accuracy in my work.

"In the photo on this page, I'm sitting in an actual NASA Space Shuttle simulator. It gave me a firsthand look at what our astronauts really go through. And I can assure you the Space Shuttle cartridge you now have is quite true to real life.

"So, don't be discouraged if you don't achieve Commander on your first flight. There are plenty of skills and a whole lot of knowledge you need to master first. I strongly suggest you fly Space Shuttle with a friend as a co-pilot - functioning as navigator and assistant.

"Learn and understand this manual. The knowledge you gain will not only help with my program but, who knows, may get you a seat on the next real trip into orbit."

Steve Kitchen is a master software designer, engineer and inventor. He was involved in the development of digital watches, the first handheld electronic games and electronic calculators. "Space Shuttle - A Journey Into Space" was Steve's first work for Activision.

GAME SETUP

Hook up your ColecoVision console or ADAM computer to a TV set, as described in your owner's manual. Make sure the machine's power supply unit is plugged into a regular residential power outlet.

If you are playing this game on a ColecoVision console, you must first insert the Coleco Super Game Module into the front expansion port, as described by the image below. **If you are playing this game on an ADAM computer, the Super Game Module is NOT required.**

This is a game for one player only, so plug a compatible hand controller into joystick port #1. Any compatible controller should normally function with Space Shuttle - A Journey Into Space, but if you use a third-party controller without a numeric keypad, most of the game's functions and features will be inaccessible to you. **It is highly recommended to install the custom controller overlay that is included with your game cartridge.**

Insert the Space Shuttle - A Journey Into Space game cartridge firmly into the cartridge port, with the label facing you. Push the ColecoVision's (or Adam's power switch to the ON position to begin playing. **(Remember to turn the machine off before removing the cartridge, or else you may damage the cartridge or the machine itself.)**

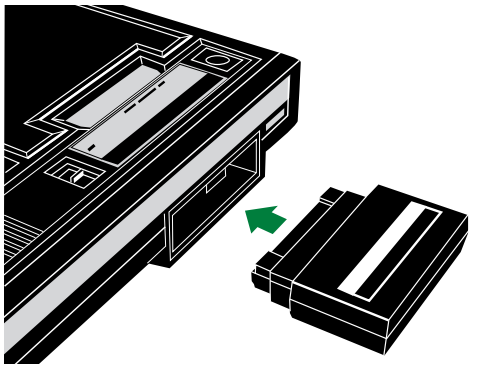

USING THE CONTROLLER

At the title screen, tap the left trigger button to cycle through the available flight modes (“FLT# 1”, “FLT# 2” or “FLT# 3”). See next page for more information about the three available flight modes.

When your desired flight mode is displayed in the center of the screen, press the right trigger button to confirm your selection. You can revise your selection if you wish (with the left and right trigger buttons) and when you’re ready to start your mission, press the [#] key on the keypad. The simulation will begin with the Shuttle resting on the launch pad, and the launch countdown will start moments later.

The joystick acts as a realistic directional hand controller: Up and down moves the Shuttle forward or back (on the X axis) while left and right controls your “plane” movement (left/right on the Y axis). You will be using the joystick to make trajectory adjustments in all stages of the mission.

Use the left trigger button to ignite the engines and apply thrust. The exact function of the trigger button varies from one stage of the mission to the next. Refer to the sub-manuals for more details.

The keypad is used to toggle the Shuttle’s systems on or off:

[1] = Primary Engines ON/OFF	[7] = Cargo Doors OPEN/CLOSE
[2] = Rotational Engines ON/OFF	[9] = Landing Gear OPEN/CLOSE
[3] = Transitional Engines ON/OFF	[0] = Status switch

The status switch is your interface to the onboard computer: Press [0] or the right trigger button repeatedly during any stage of the mission to cycle through important information: Speed (SP/M), altitude (in nautical miles), MET (Mission-Elapsed Time) and fuel units remaining. **NOTE: During the orbit stage, the information provided by the computer will be X-axis, Y-axis, Z-axis, Pitch, Yaw, MET, and fuel units remaining.**

At any time, you can press the [*] key to pause the simulation. Press [*] again to resume.

GLOSSARY

APOGEE: The highest point of an Earth orbit.

ALTITUDE: Vertical height from Earth’s surface (sea level).

ATITUDE: The position of the vehicle. For example, flying tail-first with cargo bay towards the Earth.

AXIS: A line through a body about which it rotates.

CONFIGURE: To set equipment to certain specifications.

DE-ORBIT BURN: The firing of a retro-rocket to slow the spacecraft to a speed lower than that required to maintain orbit. On the Orbiter, this is accomplished with the Orbital Maneuvering System (OMS) engines.

GLIDESCOPE: The angle at which you descend in the Orbiter or other glider with respect to the ground.

KILOMETER: 1000 meters, or 0.621 of a mile.

MACH: The term used to describe the speed of objects relative to the speed of sound (about 690 mph). Mach 2 is twice the speed of sound. The Shuttle travels through space (in orbit) at approximately Mach 22, or 17,000 mph.

ORBIT: A balance between a body’s inertia or tendency to fly off into space, and the gravitational attraction of a central object.

PITCH: Up-down rotation of the nose of the craft (see Roll and Yaw).

RANGE: Distance to edge of runway.

RETRO-FIRE: To fire engines in the direction of motion in order to reduce forward velocity. In orbit, this permits gravity to pull you downward.

ROLL: To rotate about in an axis from the front to back (nose to tail) of the Orbiter. To the pilot, a roll is like a cartwheel (see Pitch and Yaw).

RENDEZVOUS: To meet in space and orbit together.

ROTATION: Movement of the Orbiter around its three principal axes producing Pitch, Yaw or Roll.

TRAJECTORY: Flight path.

YAW: Left-Right rotation of the nose of the craft (see Pitch and Roll).

FLIGHT EVALUATION

Once you have completed Flight #3 and safely landed the Shuttle at Edwards Air Force Base, your performance will be evaluated and your ranking determined by the number of successful satellite dockings and the number of fuel units remaining at the end of your flight.

RANKING	DOCKINGS	MIN. FUEL UNITS
Commander	6 or more	7500
Pilot	4 or 5	4500
Mission Specialist	2 or 3	3500
Payload Specialist	1	1

ACRONYMS

AX: Axis
ALT: Altitude
FLT: Flight
MET: Mission-Elapsed Time
MECO: Main Engine Cut-Off
OMS: Orbital Maneuvering Systems (a.k.a. Rotational Engines)
RCS: Reaction Control System (a.k.a. Transitional Engines)
RNG: Range
SRB: Solid Rocket Booster
SP/M: Speed in Mach
SSME Space Shuttle Main Engine
STS: Space Transportation System
TAEM: Terminal Area Energy Management
DAP: Digital Auto Pilot

FLIGHT MODES

There are three available flight modes. Spend time with training flights #1 and #2 before taking on the challenge of a real, unassisted Shuttle mission (flight #3). The flight mode can only be selected before the countdown is activated.

FLIGHT #1: AUTOFLIGHT
This highly simplified simulation runs mostly on auto-pilot, and serves as an introduction to the different mission stages, namely launch, rendezvous with the satellite, re-entry, and landing. In this flight mode, most mission abort situations are ignored by the simulator. Whenever you move the joystick, you take control from that point on, but the joystick only affects the Y axis of the Shuttle, and you will not be required to press any key on the keypad during this abbreviated mission.

FLIGHT #2: SIMULATION
All astronauts spend thousands of hours practicing in ground-based simulators before flying an actual Shuttle mission. In this mode, experience the challenge and demands of a real mission with a couple of important exceptions: Your Shuttle has unlimited fuel (so take your time to complete the mission) and the onboard computers will greatly assist you during flight by compensating for less-than-perfect piloting skills. Most abort situation are overriden, but your status indicator (C-W) will alert you when you've erred.

FLIGHT #3: STS 101
This is a full-fledged, unassisted Shuttle flight. All mission aborts are in effect and flight conditions are quite realistic. Good luck!

STATUS MESSAGES

During the mission your onboard computer will alert you of conditions that could endanger the Shuttle. If an error condition is bad enough, the screen will display a “MISSION ABORT” message from which there is no recovery. Pre-launch errors (“LAUNCH SCRUB”) merely cause a re-start of the countdown sequence. Both messages indicate that the mission has failed, and you should try again.

The following numbers can appear during your mission in the C-W (Correction Warning) indicator display, or after a mission has aborted. Check these numbers against the following cross-reference tables in order to identify the problem area you experience. For further explanations regarding some of these status messages, see the “Problems and Solutions” sections found in the other sub-manuals.

PRELAUNCH (non-abort)

MESSAGE NUMBER	MESSAGE OR ACTION NEEDED
00	All Clear
20	Shutdown Primary engines
40	Close Cargo Bay Doors
60	Shutdown Primary Engines and close Cargo Bay Doors

AFTER SAFELY LANDING

MESSAGE NUMBER	MESSAGE OR ACTION NEEDED
1-99	Number of dockings with satellite. Will also appear as the last digit(s) of a C-W Mission Abort stat.

STATUS MESSAGES (continued)

INFLIGHT (mission abort)

MESSAGE NUMBER	MESSAGE OR ACTION NEEDED
00	All Clear
1000	Not lined up with runway on touchdown
1500	Touchdown too early (hit desert)
2000	Touchdown too late (run off runway)
2500	Crashed back to Earth
3000	Nose gear not down at end of runway
3500	Not on course at beginning of banking turn (Klaxon horn is on)
4000	Landing gear not down at touchdown
5000	Cargo bay doors open / landing gear down during ascent or entry interface
5500	Pitch greater than +24 on reentry into atmosphere (skip into space)
6000	Pitch less than +24 on entry interface (burn up)
6500	Yaw not 0 on entry interface
7000	Altitude too low to sustain orbit (below 195)
7500	Altitude too high (255 miles maximum)
8000	Speed too low to sustain orbit (below Mach 17)
8500	Cargo Bay doors not open during orbit (overheat)
9000	Orbit insertion angle incorrect at MECO
9500	Speed / altitude too low to attain orbit at MECO
9900	Out of fuel

SPACE SHUTTLE
A JOURNEY INTO SPACE™

FOR COLECOVISION AND ADAM

SUB-MANUAL #1
LAUNCH

OBJECTIVE

Flying the Shuttle into orbit is an extremely challenging task. Following a roller coaster path, you must match your thrust with the computer indicator, stay on the proper trajectory as plotted on the altitude display, and correct your plane as indicated in the small corner box. Each area is critical. Incorrect trajectory will cost precious fuel and may even abort your mission. An overly elevated altitude at MECO will make satellite docking more difficult.

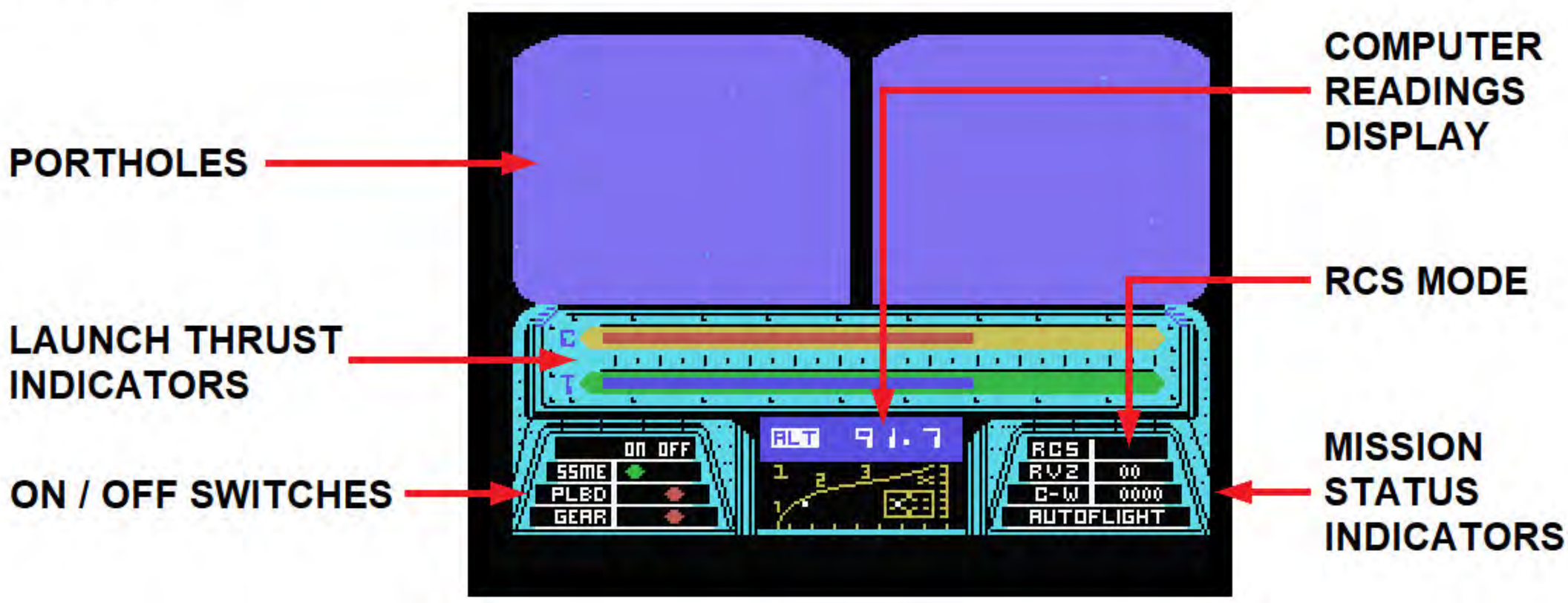

The left-hand display has three ON/OFF switches, showing the status of SSME (Space Shuttle Main Engines), PLBD (Pay Load Bay Doors, also called Cargo Bay Doors) and GEAR (landing gear).

The right-hand display shows the status of the RCS (Reaction Control System, not used during launch), RVZ (the number of successful rendezvous you have achieved with the satellite) and C-W (Correction Warnings, which is a number relating to a warning or a reason for a mission abort).

LAUNCH CHECKLIST

Launch Phase - As you fire your enormous main engines and lift off from the pad, you'll be going through 3 separate phases. The numbers 1, 2, 3 on your initial computer screen refer to:

1 - Firing of the Solid Rocket Boosters
2 - Maximum acceleration
3 - Approaching Main Engine Cut-Off.

The "X" on the right side indicates MECO (Main Engine Cut-Off).

Thrust - Notice the two, long horizontal bars on the control panel, under the portholes. "C" stands for computer, "T" stands for thrust. The "C" bar is the signal from the onboard computer indicating the proper thrust needed during each phase of liftoff. You control the "T" (thrust) bar using the left trigger button on your hand controller. Always keep both "T" and "C" bars aligned. Whenever the "T" bar flashes, you are wasting fuel and should immediately increase or decrease thrust.

Trajectory / Plane - In addition to regulating thrust, you'll need to also follow the proper trajectory (up/down on joystick) and constantly correct your "plane" (left/right on joystick).

Hold Down Bolts - Though your engines are firing, you won't leave the ground until MET+003. The "Hold Down Bolts" will keep your Shuttle on the ground until MET+003 to compensate for the mechanical strain on the Shuttle from firing the main engines.

Line Horn - If you stray from the correct launch trajectory, you will waste fuel. To alert you when this is happening, a warning horn will sound. You'll find this feature helpful in avoiding an abort situation.

Separation - A yellow flash at about 90 nautical miles will indicate Solid Rocket Booster separation (SRP SEP). Another flash shortly after MECO (Main Engine Cut-Off) will alert you that the main External Tank has separated (ET SEP) and has fallen away into the Indian Ocean.

SRP SEP and ET SEP occur automatically during launch and do not require any hand controller input.

LAUNCH SEQUENCE

1. Make sure that the Primary Engines are off, the Cargo Bay Doors are closed, and the Landing Gear is up. The MET (Mission-Elapsed Time) will start automatically as soon as all these conditions are met.

2. At MET-015, activate Primary Engines (press [**1**] on the keypad).

3. At MET-005, ignite the Primary Engines by pressing the left trigger button on the controller. When you press the button, the thrust level will increase, and when you release the button, thrust will be maintained at the given level. Pressing the button again will cause thrust to decrease, until you release the button again. Going back and forth between increase and decrease, keep the "T" bar lined up with the "C" bar during launch.

LAUNCH TRAJECTORY SCREEN

4. As the Shuttle rises, watch both blinking dots on the computer screen. You must follow the indicated launch trajectory AND continually correct your "plane" by keeping the plane dot centered in the small corner box: Press the joystick up to move the position dot to the left, press the joystick down to move the position dot to the right. Move the joystick left or right to correct the plane as it drifts.

5. During launch, you can either press the right trigger button or the [**0**] key on the keypad to check your status indicators (Mach speed, altitude, MET (Mission Elapsed Time) and fuel.

6. At about 205 nautical miles, quickly shut down the Primary Engines (by pressing [**1**] on the keypad). The closer you come to an altitude of 210 nautical miles, the closer you'll be to the satellite's orbit.

LAUNCH PROBLEMS AND SOLUTIONS

PROBLEM: MET-015 does not appear.

SOLUTION: Check the switches. Primary Engines must be shut down. Cargo Bay Doors must be closed. Landing Gear must be up. Try again.

PROBLEM: Launch Scrub.

SOLUTION: You are igniting your engines prior to or too long after MET-005. Wait for the launch systems to recycle and concentrate on firing as close to (but not before) MET-005 as possible.

PROBLEM: Mission abort as soon as Shuttle lifts off the launch pad.

SOLUTION: The onboard computer will not warn you if your landing gear is down before launch. As soon as you lift off the launch pad, you'll get a "MISSION ABORT" message (together with a C-W code of 5000) if your landing gear is down or if the Cargo Bay Doors are open in flights #2 and #3.

PROBLEM: Line horn continually sounds during launch.

SOLUTION: Keep the position dot slightly on the low side of the trajectory line to maintain proper course.

SPACE SHUTTLE
A JOURNEY INTO SPACE™

FOR COLECOVISION AND ADAM

SUB-MANUAL #2
STABILIZING ORBIT AND SATELLITE DOCKING

OBJECTIVE

Establish a stable orbit by adjusting the Shuttle's pitch to enable visual contact with the satellite, and by opening the Cargo Bay Doors for heat release. The satellite you are carrying in the Shuttle's cargo bay will be launched into its own orbit automatically once a stable orbit has been achieved.

After reaching a stable orbit, you will attempt to dock with a satellite that is travelling at Mach 23.9, 210 nautical miles above the Earth. You will either need to slow down or speed up to rendezvous (X axis). Also, you will need to be at the same altitude (Z axis), and position (Y axis). All of these maneuvers are interrelated - changing one can affect the others. And, in flight #3, the longer you take to dock, the more fuel you'll use! It is also better to tap the joystick than to hold it down (this saves fuel).

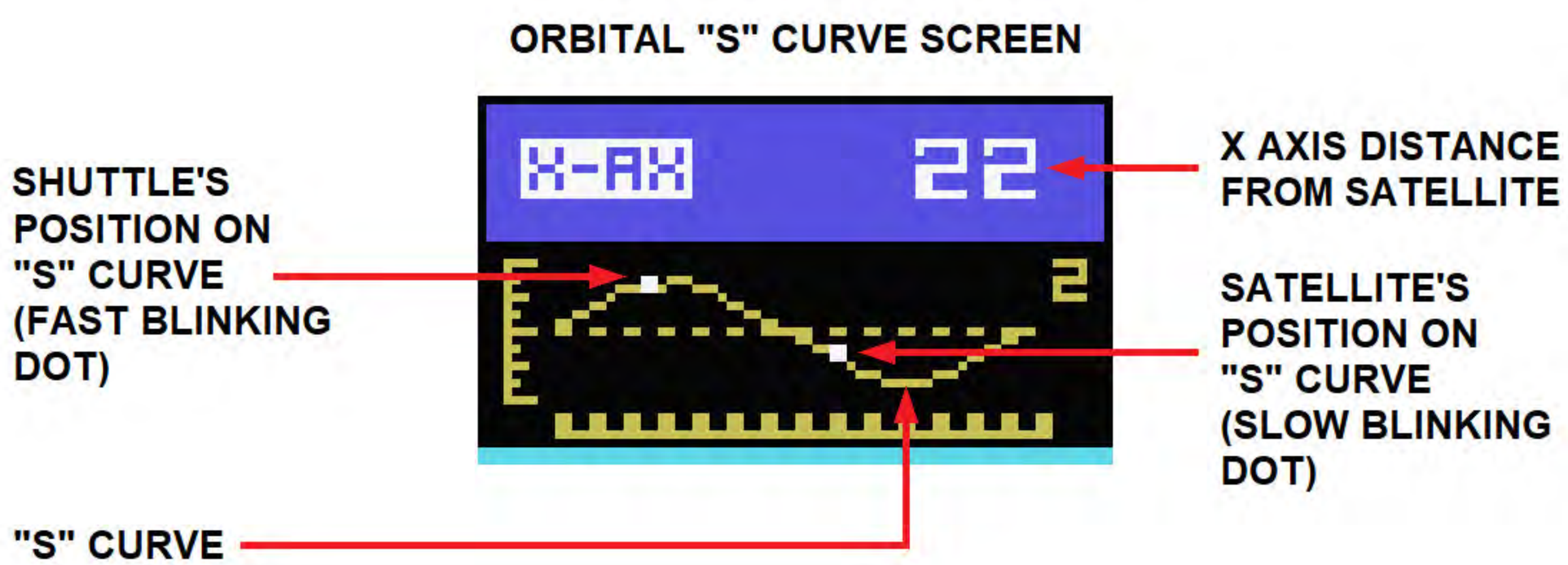

STABLE ORBIT CHECKLIST

Nose Down Maneuver - When the Shuttle achieves orbit, the nose of the craft is pointed up, out of the line of sight of the satellite. In order to dock, you must see the satellite. So it is necessary to bring the nose down, which is done by adjusting the pitch (the up/down movement of the nose of the Shuttle).

Cargo Bay Doors - One of your first tasks in orbit will be to open the Cargo Bay Doors. This is vital and must be accomplished within the first orbit. The radiators that shed excess heat generated by the Shuttle are on the inner surfaces of these doors. If the doors remain closed, heat builds up within the vehicle, and a warning horn will sound. You then have 30 seconds left to open the Cargo Bay Doors. If the doors aren't quickly opened, the mission will have to be aborted.

STABLE ORBIT SEQUENCE

1. Activate the Rotational Engines (press [**2**] on the keypad). "ROT" will appear in the RCS indicator on the right-hand side.

2. Push the joystick up to set the Shuttle's pitch to -28.

3. Open the Cargo Bay Doors (press [**7**] on the keypad).

Nose pitch down and Cargo Bay Door events must be performed as quickly as possible, during the first orbit revolution, before any on-orbit operations can be attempted. Once this is done, wait until the satellite is launched from the Shuttle's Cargo Bay.

ROTATIONAL ENGINES FOR EXPERTS

For smaller, precise adjustments, you'll want to achieve orbital maneuvers with your TRN engines. They're easier to use. However, time means fuel. Housekeeping fuel - used to keep the various electrical equipment and life support systems of the Shuttle operating - is constantly being expended. So, it's imperative you make your orbital corrections as efficiently and quickly as possible. This is where your ROT engines (also called Orbital Maneuvering System, or OMS) can be of great aid. When making major maneuvers (30 nautical miles or more) you can use the 12,000-pound thrust of the OMS engines. However, since using these powerful engines can dramatically affect your altitude, *read the following instructions carefully*.

X AXIS CORRECTION USING OMS ENGINES

When flying forward on the X axis (Yaw = 0) using your OMS engines, your altitude will drop faster if your pitch is zero or negative. When flying backwards on X (Yaw = -128) using your OMS engines, your altitude will rise if your pitch is positive or zero, and your altitude will not be affected by the OMS burn if your pitch is negative.

Sequence:
- Make sure the ROT engines are enabled (press [**2**] on the keypad).
- Set pitch to correct value (as desired).
- Set Yaw to +128 or -128 (to orient the Shuttle backwards on its orbit).
- Fire engines by holding the left trigger button for a certain amount of time.
- Restore yaw and pitch to initial values.

Y AXIS CORRECTIONS USING OMS ENGINES

As you perform a Y OMS burn, you'll see your Y indicator change. If you forgot to change your pitch to 0, your altitude will change. A positive pitch will make you fall. A negative pitch will force you to rise. A non-zero pitch also burns extra fuel.

Sequence:
- Make sure the ROT engines are enabled (press [**2**] on the keypad).
- Set pitch to correct value (as desired).
- Set yaw to +64 or -64 (corresponds to 90 degrees left or 90 degrees right).
- Fire engines by holding the left trigger button for a certain amount of time.
- Restore yaw and pitch to initial values.

In other words, when correcting either the X or Y axis using your OMS engines, *your altitude may be affected*. Taking this into account, it is possible to make both Z (altitude) *and* X or Y corrections, all in the same maneuver if very skillfully done.

DOCKING CHECKLIST

Maneuvering in Space - For major maneuvers (30 nautical miles or more) the ROT engines can be used. However, the ROT engines take a good deal of understanding and experience to use effectively (see page 6 for more details). So, when first starting out, use the TRN engines. These clusters of rocket engines in the Shuttle's nose and tail can move the Shuttle about its three major axes (X, Y and Z).

Shuttle Speed and Position - Speed is just as important as position. Never allow your speed to drop below Mach 17.0, or your altitude to fall below 195 nautical miles, or you'll burn up in the atmosphere! Your X axis to the satellite is dependent upon your speed, not the ROT or TRN engines. To move towards the satellite, you must increase your speed to greater than Mach 23.9 (the satellite's speed). When you make your final approach to the satellite, keep your speed close to Mach 23.9.

Drifting - As you move closer to the satellite, constantly go back and forth to check all axes. Settings continually shift, and the satellite's movement can be erratic.

"S" Curve - On the "S" curve computer screen, the "S" line indicates both the Shuttle's and the satellite's ground track around the Earth. The flashing dot is your Shuttle, the solid dot is the satellite. Notice as you track the satellite, your X axis will suddenly change significantly as the satellite "wraps around" the tracking line. This is because the orbital tracking line wraps around the display as a real orbit wraps around the Earth.

Docking Screen - You'll use the "S" curve screen until you get fairly close to the satellite. Then, the "Docking" computer screen will appear, with two smaller radar screens. The left radar screen shows your Z axis (up-down) and a wide view of your Y axis (left/right). The right radar screen, which you'll use more, shows the X axis (left/right) and micro-Y axis (close-in up/down).

Multiple Dockings - Every time you dock, you receive a "Rendezvous" sign and a certain number of fuel units. However, each docking becomes more and more difficult. So, for each successive docking, you receive more fuel. After each docking, the satellite has been programmed to sail a good distance away from your Shuttle. *Wait until it settles (x = +128 or -128) before beginning another docking attempt.*

DOCKING SEQUENCE

Match the position of your Shuttle with that of the satellite's by correcting your Z, Y and X axes, preferably IN THAT ORDER. The instructions below are to be executed using the TRN engines (press [**3**] on the keypad).

1. Correct Z axis to 0: Hold down the left trigger button and tap the joystick either up or down. A negative number means the satellite is below you, so push the joystick up to dive. A positive number means the satellite is above you, so pull the joystick down to climb.

2. Correct Y axis to 0: Tap the joystick to the right. A positive number means the satellite is right of you, so push your stick right to line up with it. A negative number means it is left of you, so push joystick left to line up with the satellite.

3. Correct X axis to 0: Tap the joystick back. A positive number means the satellite is ahead of you. A negative number means it is behind you. To increase the Shuttle's speed, push joystick forward. To decrease speed, pull joystick back. Keep an eye on the Shuttle's speed ("SP/M") on the status screen.

4. Dock: All axes must be adjusted to 0, and stabilized for 2 seconds, then you will receive a "Rendezvous" signal, indicating you've docked.

DOCKING SCREEN

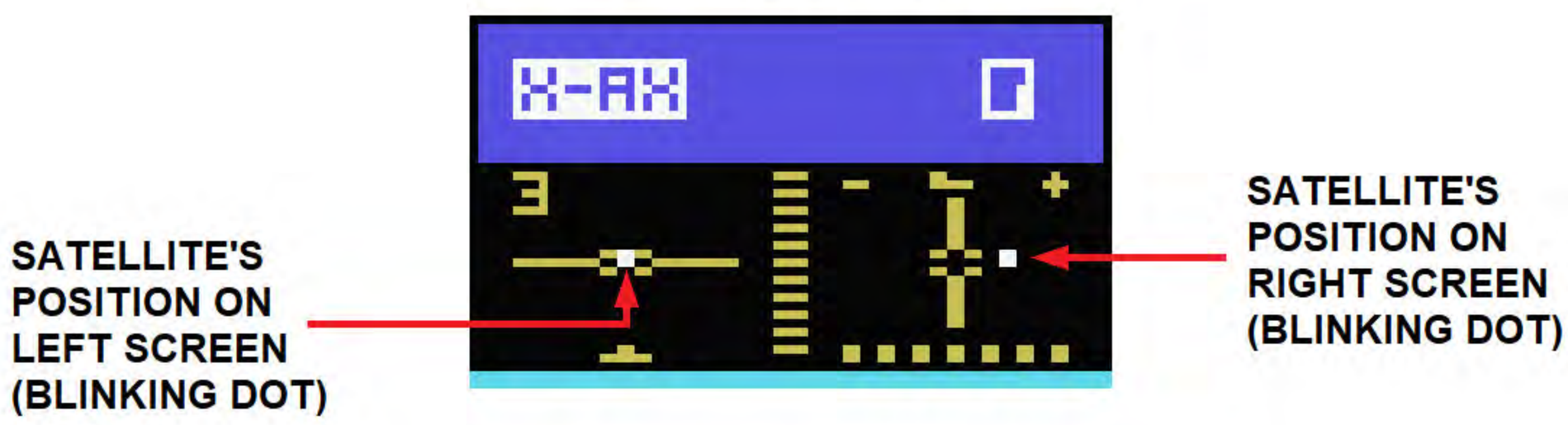

ORBITAL OPERATIONS

You've successfully launched your Shuttle into orbit. Now, it's time to dock with the defective satellite. You have two maneuvering options for your Shuttle, namely the ROT (Rotational Engines) for adjusting Yaw and Pitch, and TRN (Transitional Engines) for adjusting the X, Y and Z axis.

To dock with the satellite, you must maneuver to set the X, Y and Z axis to zero.

While in orbit, press [**2**] on the keypad to enable the ROT engines, or press [**3**] to enable the TRN engines.

Whether you're making position corrections using the ROT or TRN engines, remember that every action you take may affect your axis (X,Y,Z) or altitude. For example, if your pitch is -028 (nose-down) and you perform a ROT burn to correct your X axis, your altitude (Z axis) will drop because the Shuttle's nose is pointing towards the Earth.

Try and picture the position of the Shuttle in your mind as you're orbiting. Use the diagrams below to help you visualize Shuttle positioning.

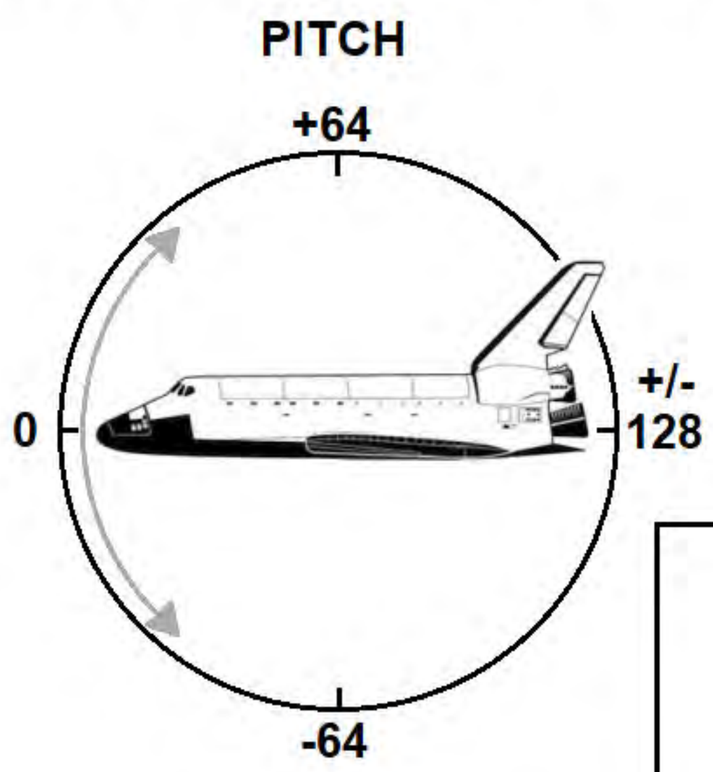

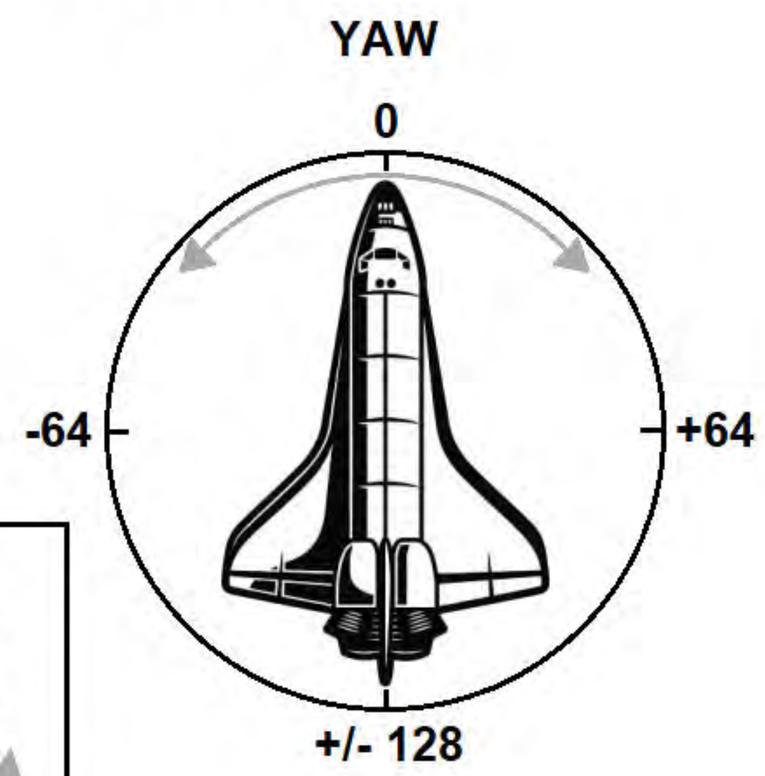

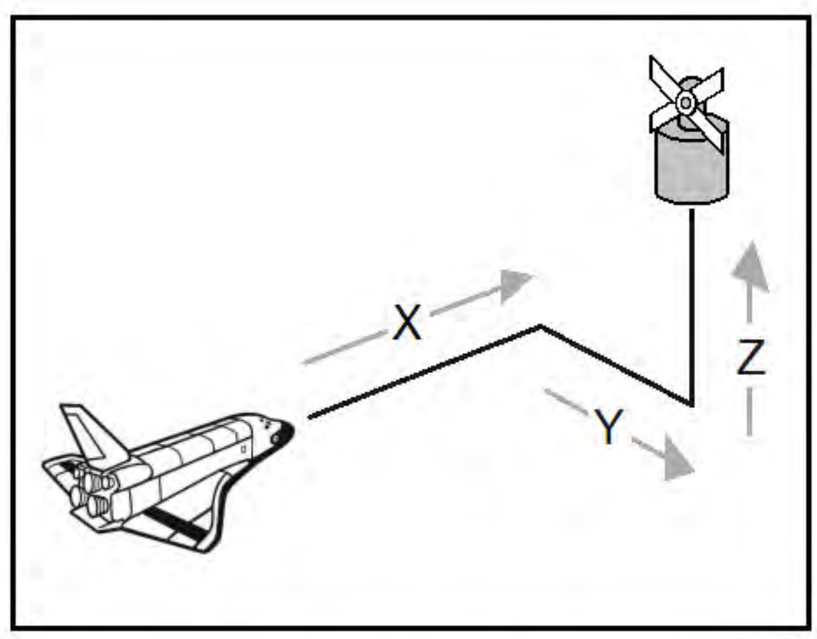

Z = Vertical distance to satellite (Z = 0 means altitude of 210 miles)
Y = Left/right distance to satellite
X = Forward and back distance to satellite
PITCH = Up-down rotation of the nose of the craft
YAW = Left-right rotation of the nose of the craft

STABILIZING ORBIT - PROBLEMS AND SOLUTIONS

PROBLEM: Initial orbit position too low, or speed too low.

SOLUTION: You're shutting off the main Engines before proper altitude is achieved. Cut off your main Engines as close to 210 miles as possible during the launch phase.

PROBLEM: "Mission abort" signal as soon as you shut down engines.

SOLUTION: Dependent upon your mission abort number, either:

1) Speed or altitude were too low to sustain orbit.
2) You were far off the trajectory line at MECO.
3) You shut down your engines too early.
4) Your orbit insertion angle was incorrect.
5) Your plane (left/right position) was incorrect.

PROBLEM: Once in orbit, Y axis is off badly.

SOLUTION: Plane (left/right position) was not centered at MECO during the launch phase.

PROBLEM: Once in orbit, Z axis is off badly.

SOLUTION: You shut down your engines too early. Remember that your Z axis is directly related to your altitude. The lower your altitude, the more negative your Z axis. A Z-15 axis equals an altitude of 196.0 miles. When Z axis equals 0, altitude is 210 nautical miles, the altitude of the orbiting satellite.

PROBLEM: Horn sounds, followed by mission abort soon after reaching orbit.

SOLUTION: Cargo Bay Doors were closed too long and the Shuttle overheated. You have approximately 30 seconds to open Doors after achieving orbit.

DOCKING - PROBLEMS AND SOLUTIONS

PROBLEM: Although axes are adjusted, satellite is never sighted and docking screens never appear.

SOLUTION: Check your pitch and yaw. If pitch is not -28 (Shuttle nose-down), you'll never be in line of sight of the satellite. If yaw is less than -17 or higher than +17, you'll also be out of line of sight (i.e. Shuttle's line of sight will be too far left or right). With Z and Y axes adjusted to zero, docking screens should appear when the satellite is at X +16 or -16, assuming pitch is -28 and yaw is 0.

PROBLEM: Conducting ROT burn sends Shuttle into dramatically high or low altitudes.

SOLUTION: Check your pitch. Always make sure your pitch is 0 before conducting an ROT burn unless you intentionally wish to adjust your altitude during burn.

PROBLEM: Axes all adjusted, satellite spotted, but you can't dock.

SOLUTION: Check your speed. The satellite always travels at Mach 23.9. So if you're having trouble docking, adjust the Shuttle's speed to Mach +/- 1.

SPACE SHUTTLE
A JOURNEY INTO SPACE™

FOR COLECOVISION AND ADAM

SUB-MANUAL #3
DEORBIT BURN AND REENTRY

OBJECTIVE

Deorbit is one of the most critical phases of your flight. Following completion of orbital operations, the Shuttle is re-oriented into a tail-first attitude, then decelerated to a necessary speed for reentry. The orientation and deceleration of the Shuttle is done via the ROT (OMS) engines. You begin to lose altitude once you've slowed the Shuttle down below the actual velocity needed to sustain your 210-mile orbit.

Once deorbit operations have been successfully completed, the Shuttle's onboard computer will switch to the reentry display.

During reentry, you must establish and maintain the correct pitch, yaw and speed as you glide down into the atmosphere. Follow the correct trajectory and properly manage heat build-up. There are three important stages to Reentry: Entry Interface, Terminal Area Energy Mangement (TAEM), and Loss of Signal (LOS). Position, altitude, velocity and heading must all be exact to both properly manage the tremendous heat buildup and correctly position your shuttle for the Final Approach.

REENTRY CHECKLIST

Entry Interface - This is the point in your flight where atmospheric entry officially begins. As the Shuttle descends, atmospheric drag dissipates tremendous energy, generating a great deal of heat. This heat quickly builds up (portions of the vehicle's exterior reach 1540 degrees Celsius). Pitch and speed must be correct to properly utilize the Shuttle's Thermal Protection system.

Terminal Area Energy Management - After entry interface, you must closely follow the proper descent trajectory in order to manage your altitude and speed to reach the final touchdown point. This process of conserving your energy by maintaining the correct position, altitude, velocity and heading is called Terminal Area Energy Management (TAEM).

Loss of Signal - During reentry, the Shuttle superheats the gas of the upper atmosphere. Heat strips electrons from the air around the Shuttle, enveloping it in a sheath of ionized air that blocks all communication with the ground. So, at 160 miles, you will experience a temporary partial loss of signal (LOS). Keep a close eye on your radar at this point. You will receive intermittent signals which you need to use to correct your course and plane.

Descent Screens - On your reentry screen, "X" indicates cut-off of your OMS engines (deorbit burn). "T" indicates the Terminal Area Energy Management Phase. "L" indicates your transition to final landing approach. The small box at left is your plane (left/right) indicator.

REENTRY TRAJECTORY SCREEN

MISSION ELAPSED TIME (MET)

TRAJECTORY LINE

SHUTTLE'S POSITION ON TRAJECTORY LINE (BLINKING DOT)

"PLANE" INDICATOR (BLINKING DOT)

DEORBIT CHECKLIST

Satellite Interference - Before attempting a deorbit burn, you must allow the satellite to pull a safe distance away from the Shuttle. If you don't, your deorbit burn will be unsuccessful, and you will never leave orbit!

Deorbit Burn Maneuver - Set your Z axis (altitude) and pitch, then turn the Shuttle around so that it is travelling tail-first. Once completed, fire the OMS engines to decelerate. If the Z axis and pitch are not set properly, firing the OMS engines will make your Shuttle climb or dive.

After the Deorbit Burn - The Shuttle must be re-oriented nose-forward with the proper attitude for reentry. Entering the atmosphere backwards will cause the Shuttle to burn up.

DEORBIT SEQUENCE

1. Make sure the "S" curve computer display is active, or in other words, put some distance between your Shuttle and the satellite if the docking screen is enabled. You may need to alter the X axis by pressing the joystick up or down (with TRN engines active).

2. Once the satellite's proximity is no longer an issue, set speed to Mach 23.9 by pulling the joystick back or forward (with TRN engines active).

3. Correct your Z axis to 0 (i.e. make sure altitude is exactly 210 miles).

4. Activate ROT engines (press [**2**] on the keypad).

5. Turn your Shuttle around by pressing joystick left or right to set yaw at +/-128.

6. Move joystick up or down to set pitch to -004.

7. Ignite engines by pressing the left trigger button. Hold down the button until speed comes down to Mach 19.0.

8. Quickly set pitch to +24, close Cargo Bay Doors (press [**7**] on keypad) and reset yaw to exactly zero, preferably in that order. Note that an alarm may sound indicating a heat build-up after closing Cargo Bay Doors. The alarm will turn off (and mission abort will be avoided) if you manage to set pitch to +24 and yaw to zero within 30 seconds.

REENTRY SEQUENCE

1. Keep the Shuttle (which appears as a blinking dot) on the optimal trajectory line on the reentry computer screen. Push the joystick up to go left, pull the joystick down to go right. If you stray from the trajectory line, a warning horn will sound.

2. Move the joystick left or right to keep the plane (blinking dot) centered within the plane indicator sub-display, in the lower left corner.

DEORBIT / REENTRY PROBLEMS AND SOLUTIONS

PROBLEM: After conducting a successful deorbit burn, you still aren't losing altitude for reentry.

SOLUTION: The satellite may be interfering. Wait until it is at least 128 miles away (X axis) before conducting a deorbit burn. Also, make sure your altitude is 210 (Z axis is 0) and speed is Mach 23.9 before attempting the deorbit process.

PROBLEM: Burn up during reentry.

SOLUTION: If your pitch is greater than +24, your Shuttle cannot be protected by its special insulation. If pitch is less than +24, you'll skip into space. If yaw is not zero, you'll spin out. And if the Cargo Bay Doors are left open, your Shuttle will also burn up.

SPACE SHUTTLE
A JOURNEY INTO SPACE™

FOR COLECOVISION AND ADAM

SUB-MANUAL #4
LANDING

OBJECTIVE

During the final approach, descent speed is critical. Not only do you need to center the Shuttle on the runway, but you must also constantly monitor and adjust your pitch at the same time, in order to control your descent speed.

You'll hear a beeping effect (like the warning horn going on and off) throughout the landing phase. The beep effect will gradually turn into a continuous warning horn as you get closer to the runway.

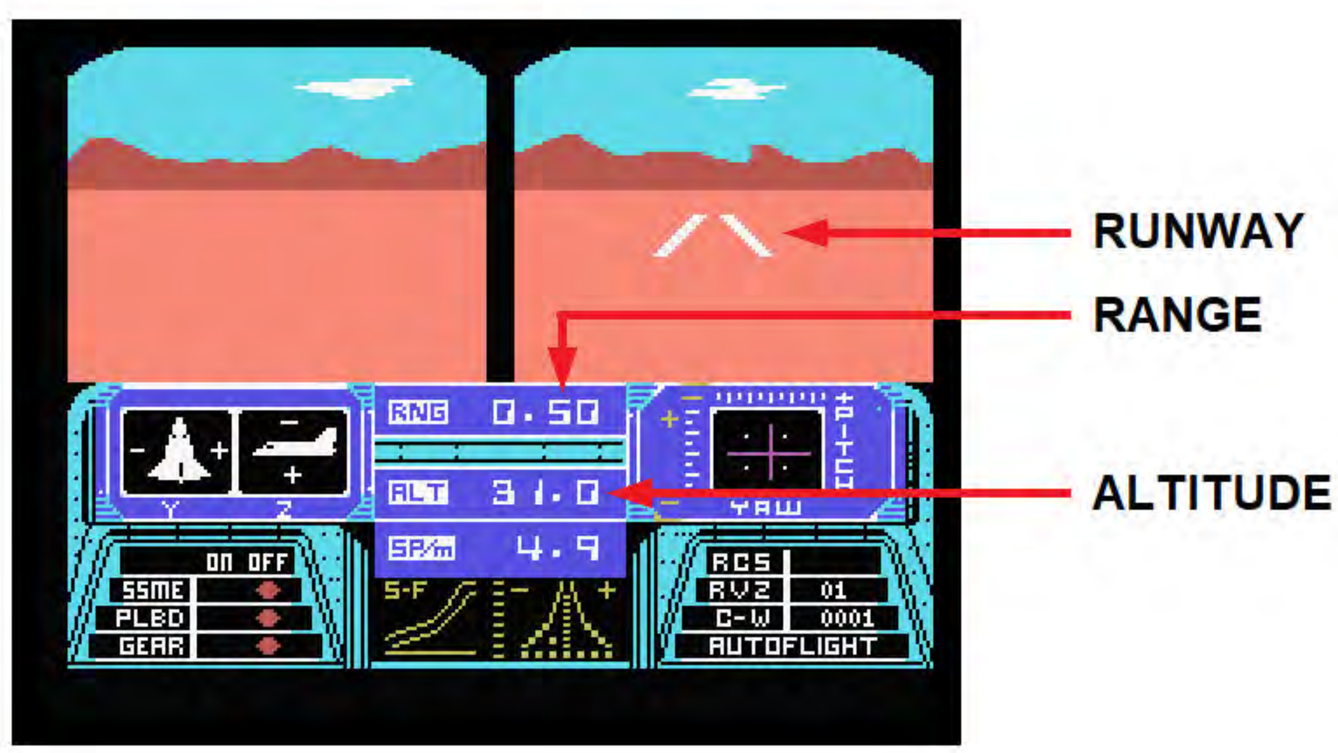

LANDING CHECKLIST

Final approach - As you leave the reentry phase and enter your final approach, the first thing you'll see are the mountains around Edwards Air Force Base. At this point, your Shuttle is a glider. In order to maintain enough altitude and speed to reach the touchdown point, you'll need to make an extreme right turn which will leave you lined up with the runway entry point.

Landing Screens - Closely watch all your flight instruments. At this point events happen quickly. You will need to keep your nose at the correct pitch to follow the optimal approach trajectory while constantly watching altitude and range. Lines on the left screen box (Altitude Direction Indicator) indicate the ideal trajectory, and your upper and lower safe limits. The right box is your Horizontal Situation Indicator. It shows your position relative to the runway.

Range - Range is the distance from the start of the runway to your Shuttle. When the range is negative, you are above the runway and seconds away from touchdown.

Surface Conditions - Since you're in the desert, crosswinds can become a real problem. Compensate by constantly moving the joystick left/right and up/down to maintain the proper trajectory and descent rate until touchdown. Don't let up on your concentration just because you're close to home.

LANDING SEQUENCE

1. As soon as you see the mountains, make a right turn. Line up the Shuttle with the runway using the radar screen, or by looking out the portholes and keeping the Shuttle between the two while lines approaching on the horizon.

2. Follow the final approach course on both computer screens. Left screen: Keep the blinking dot centered between the two arched lines. Right screen: Keep the blinking dot centered on the straight vertical runway approach line. Push the joystick up to lower the nose and make the Shuttle dive (this quickens descent). Pull the joystick down to raise the nose (slows descent). Push the joystick left or right to keep the blinking dot centered on the right screen.

3. Keep an eye on the RNG (range) value, and as you approach closer to the runway, make sure to keep your altitude above zero while the range value is still above zero, otherwise you will touchdown too early and crash. When the RNG value goes negative, you're over the runway, just seconds from touchdown, so drop landing gear *now* (press [**9**] on the keypad).

4. Push joystick up to lower the Shuttle's nose.

5. When the Shuttle hits the runway, your nose will pop up, so keep pushing up on the joystick to keep your nose down until you come to a complete stop on the runway.

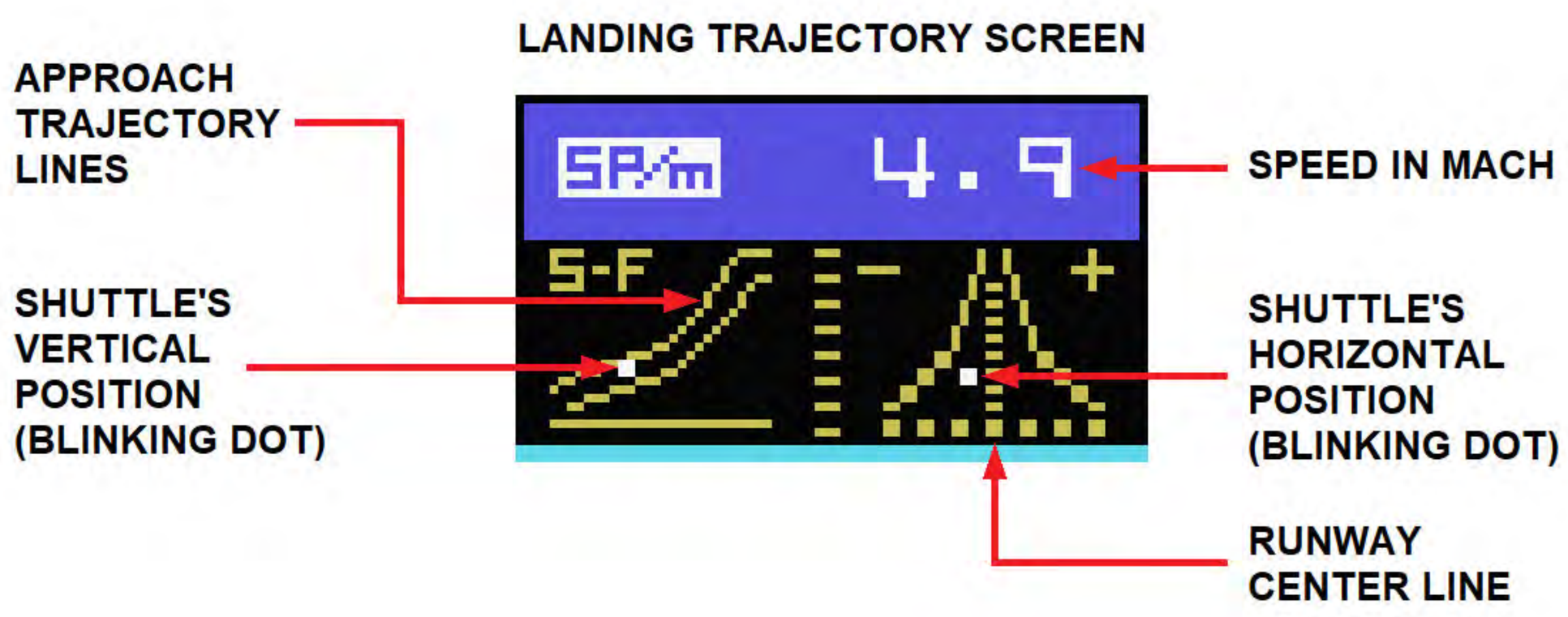

LANDING PROBLEMS AND SOLUTIONS

PROBLEM: Mission Abort as soon as you break through the cloud covering.

SOLUTION: You *cannot* be off course (klaxon horn is on) during the last few seconds of your reentry. This will place you in the wrong position for Final Approach - altitude and speed will be adversely affected! So, stay right on course at the end of reentry. Don't let up.

PROBLEM: You crash into the desert floor.

SOLUTION: This is probably a result of improper use of your Altitude Direction Indicator (ADI). The ADI is your left computer screen during landing. It tracks your altitude and descent. Always keep the Shuttle above the lower of its two lines. Moving the joystick forward or back helps to do this by raising or lowering the nose of the Shuttle (quickens or slows descent). Importantly, as soon as you drop the landing gear, drag will cause the nose to flare up. So, when landing gear is dropped, push and hold joystick up to bring (and keep) the nose down.